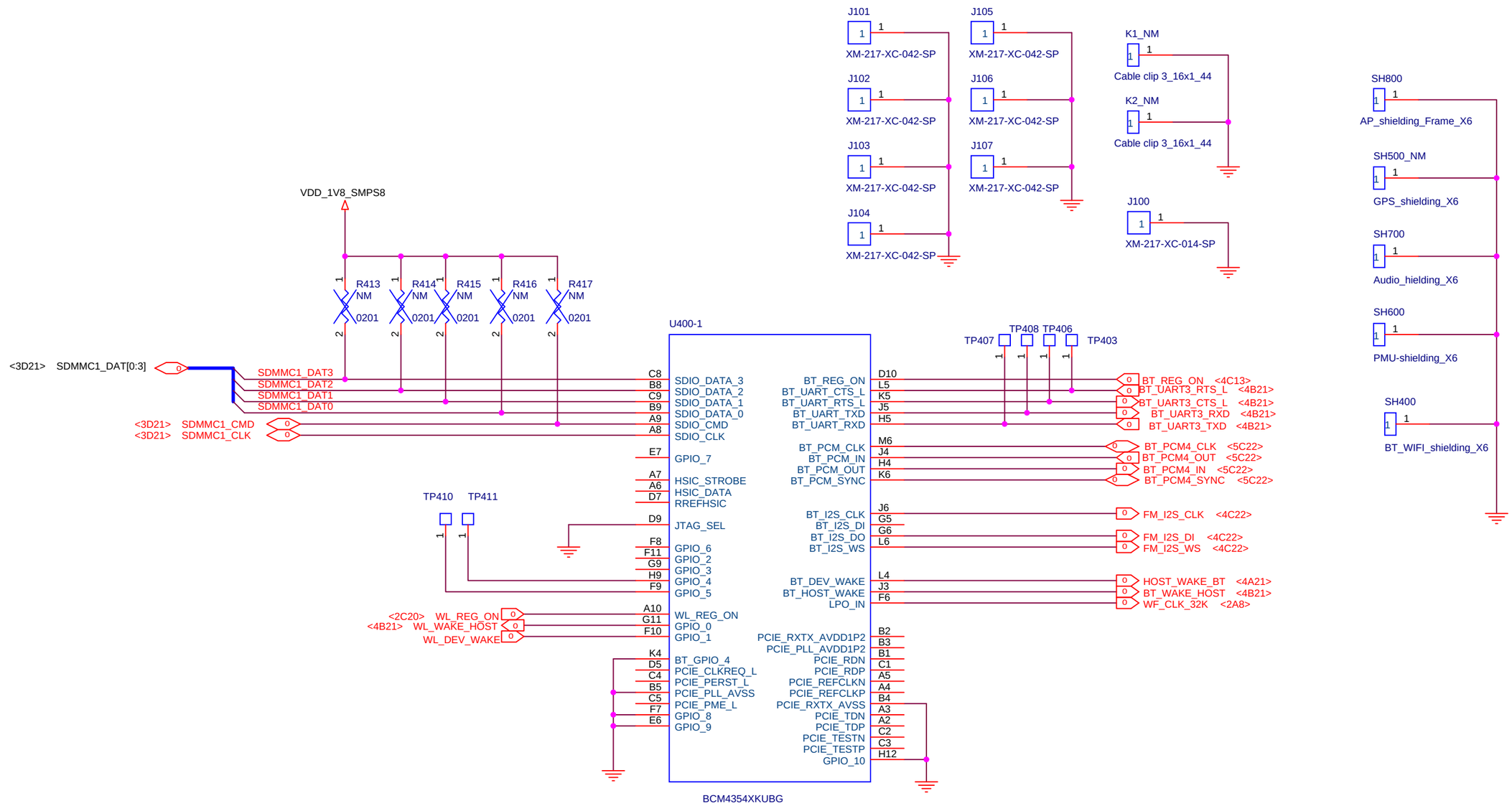

BT/WIFI INTERFACE

Title	MI-THREE	
Size A3	Document Number <Doc>	Rev P2B
Date:	Sheet 1 of 26	

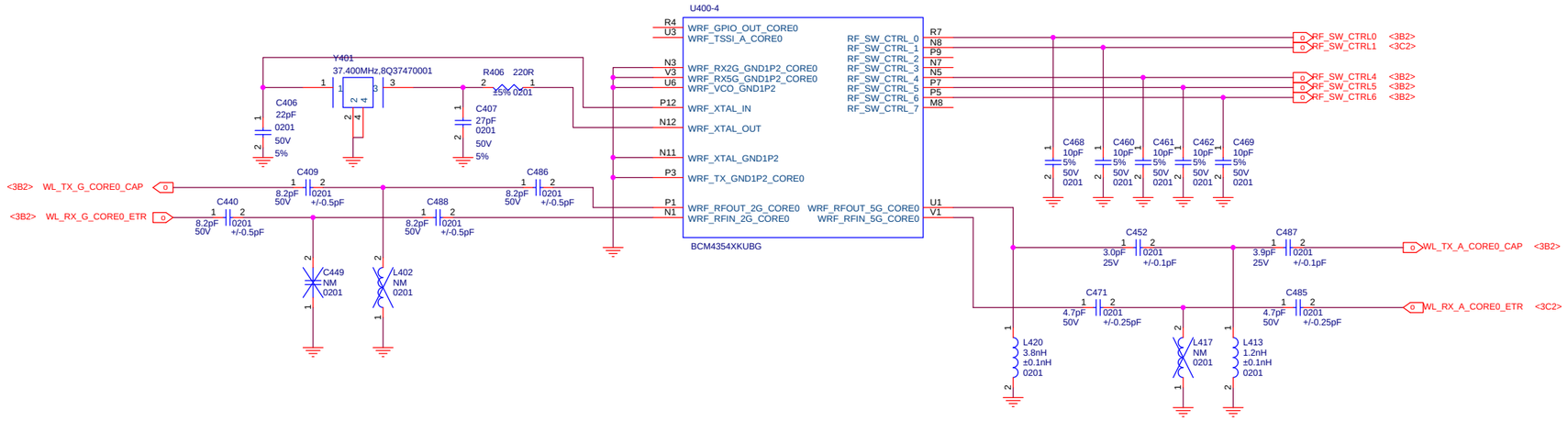

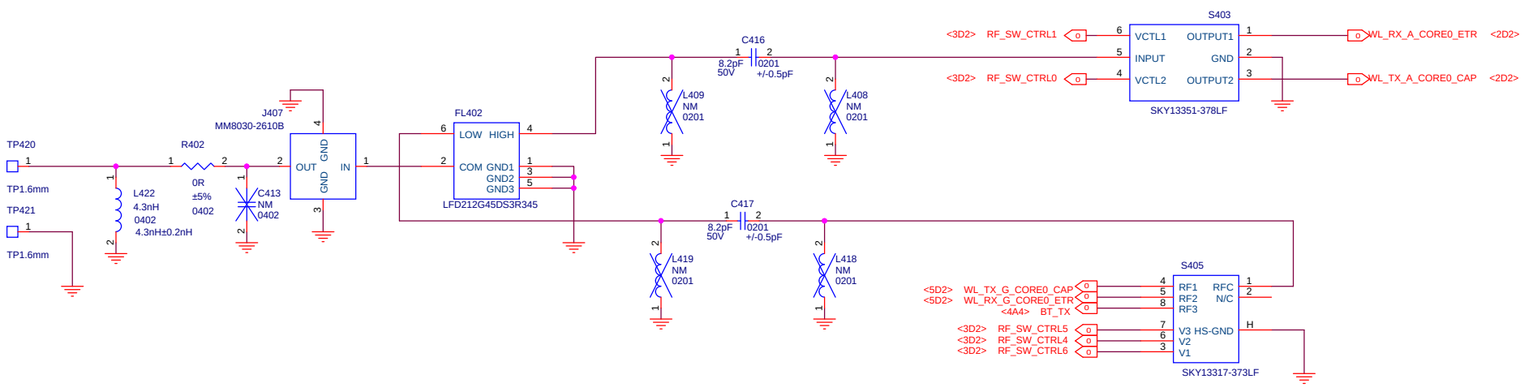

Title	MI-THREE
Size A2	Document Number <Doc>
Rev	P2B
Date:	Sheet 2 of 26

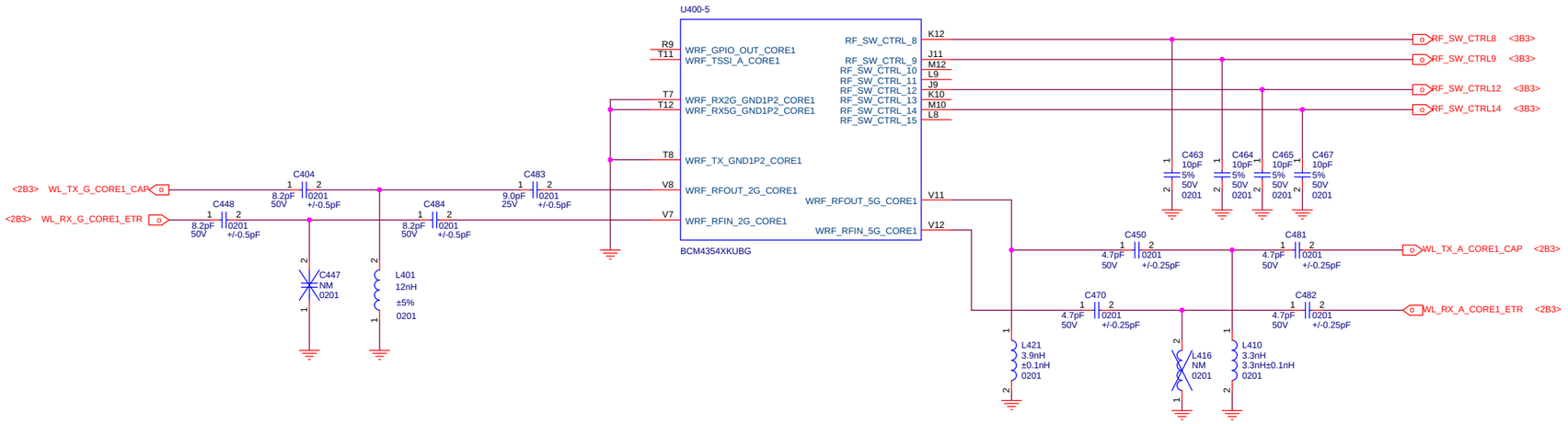

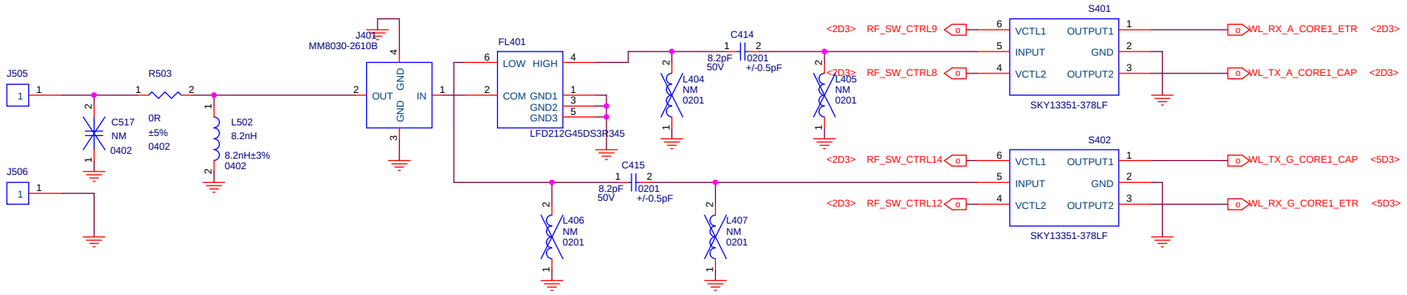

Title	MI-THREE
Size A2	Document Number <Doc>
Rev	P2B
Date:	Sheet 3 of 26

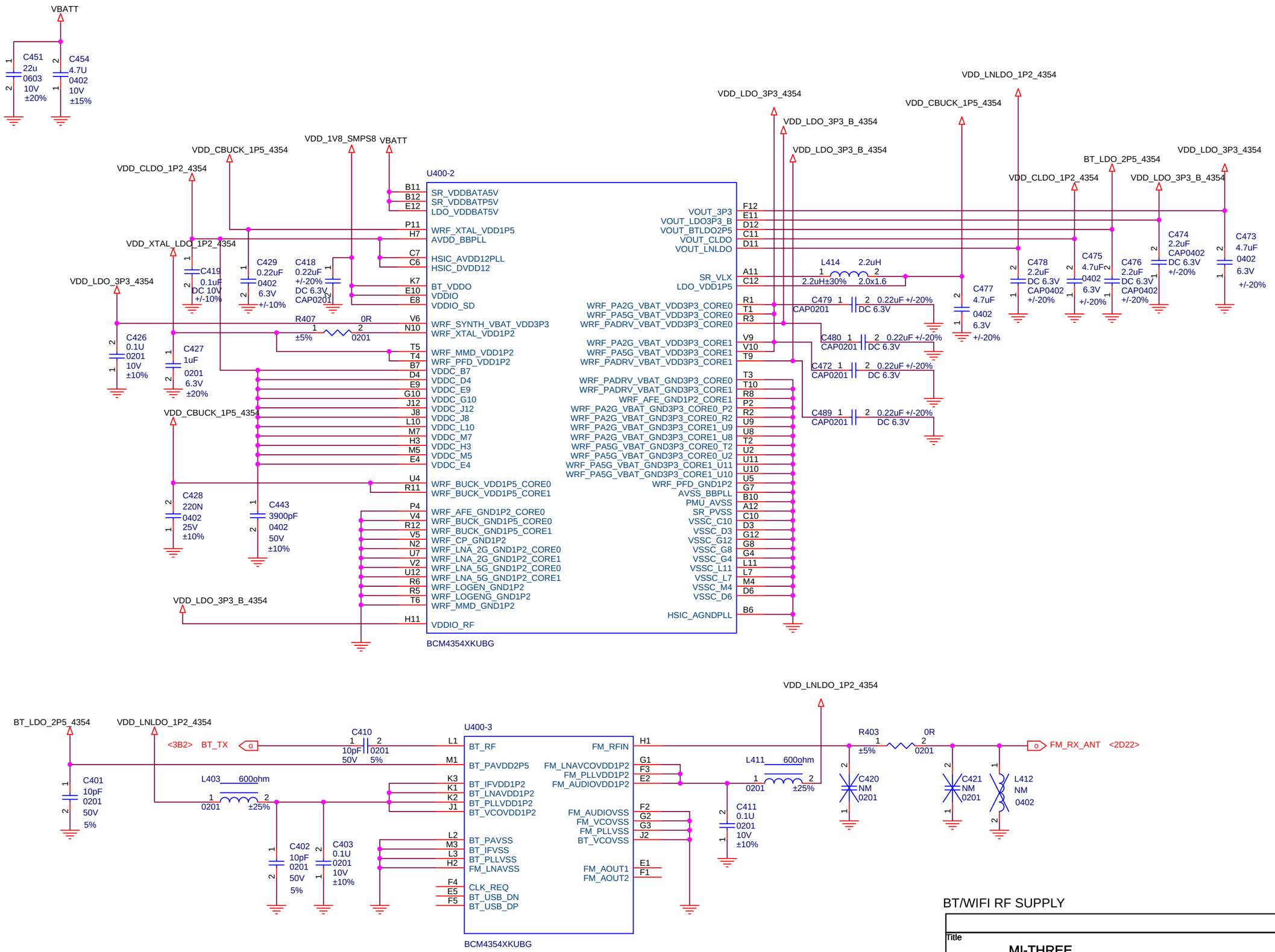

BT/WIFI RF SUPPLY

Title	MI-THREE	
Size A3	Document Number <Doc>	Rev P2B
Date:	Sheet 4 of 26	

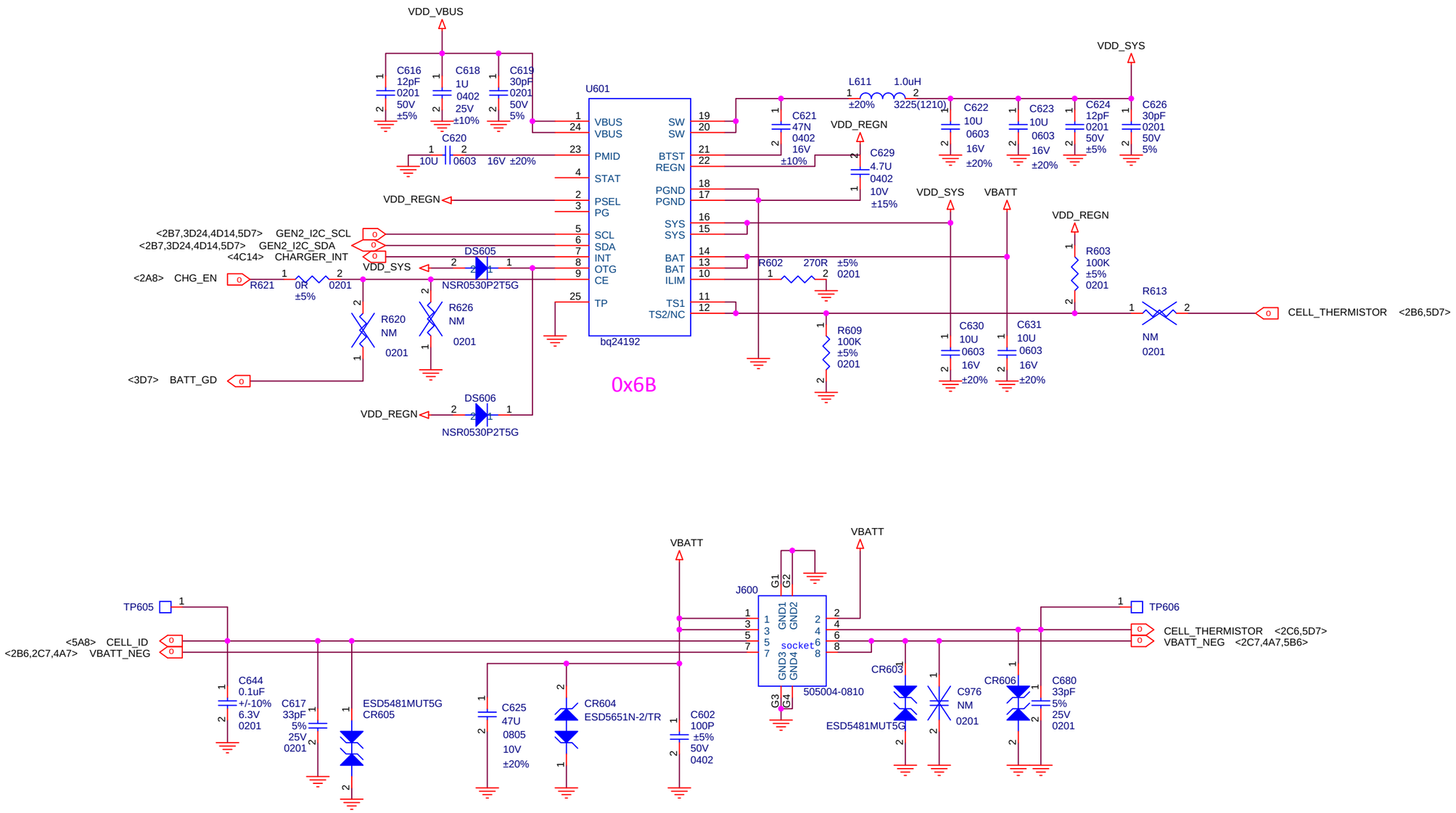

CHARGER

Title	MI-THREE	
Size A3	Document Number <Doc>	Rev P2B
Date:	Sheet 6 of 26	

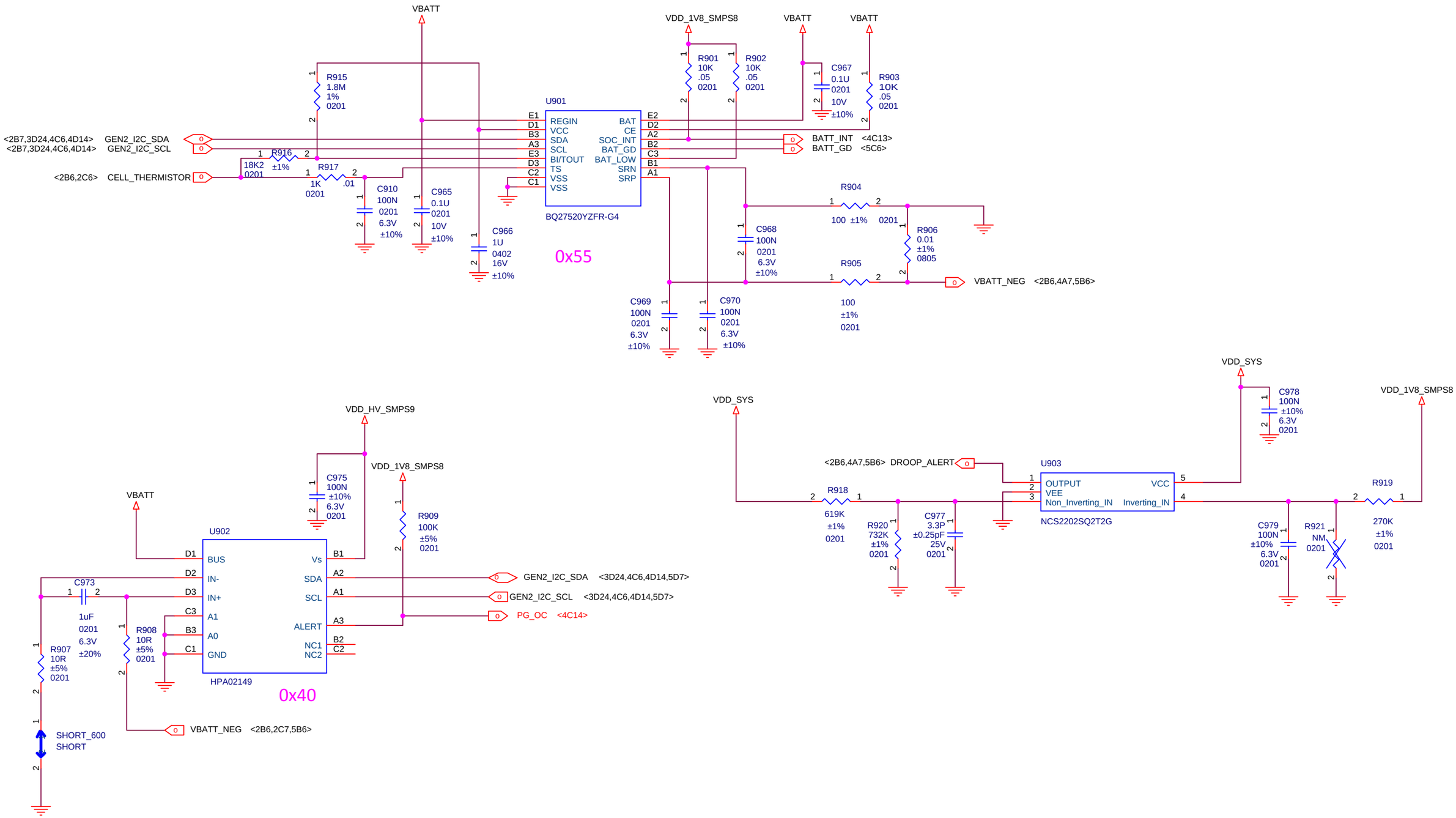

FLASH&HAPTIC

Title	MI-THREE	
Size A3	Document Number <Doc>	Rev P2B
Date:	Sheet 7 of 26	

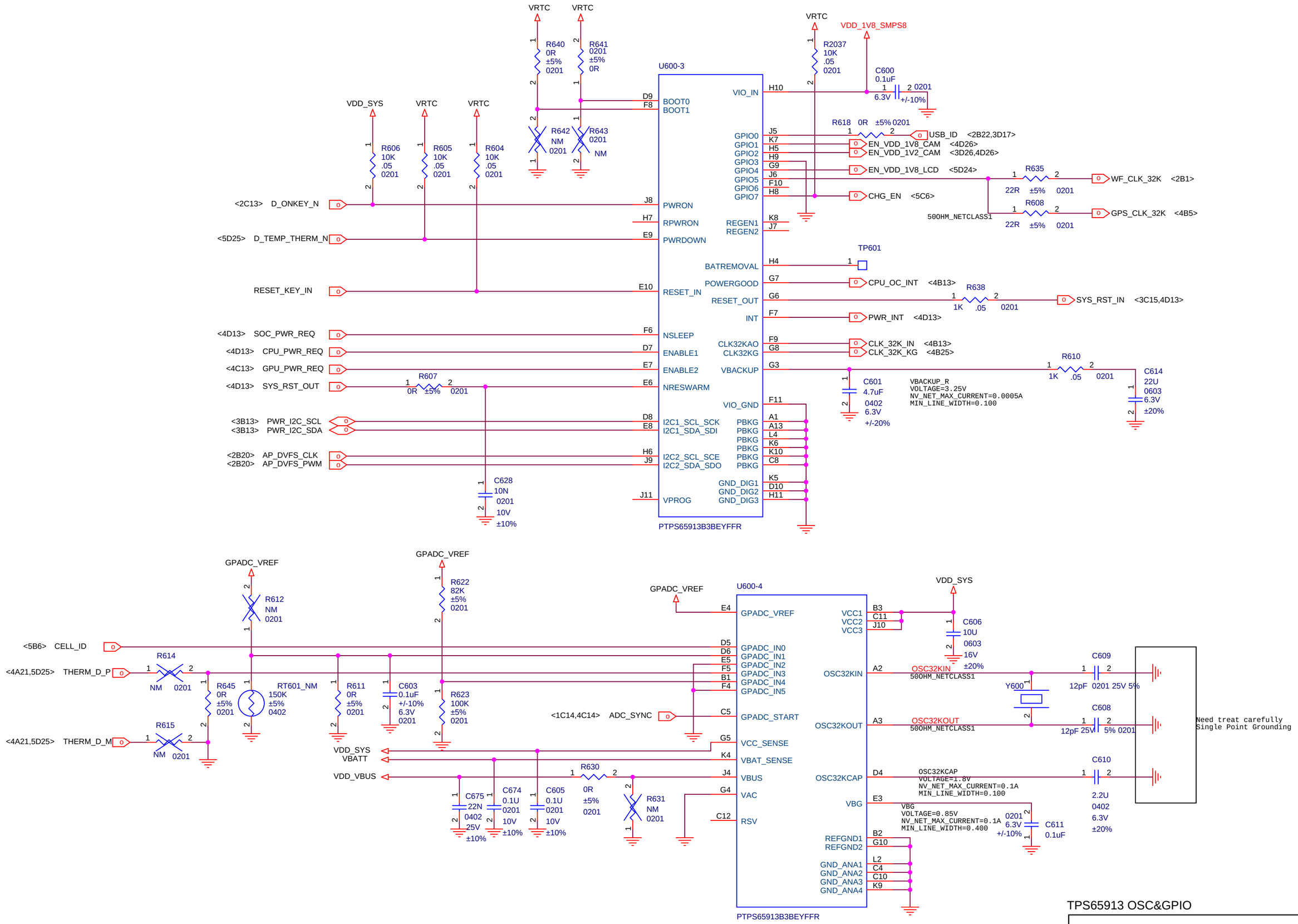

TPS65913 OSC&GPIO

Title	MI-THREE	
Size A3	Document Number <Doc>	Rev P2B
Date:	Sheet 8 of 26	

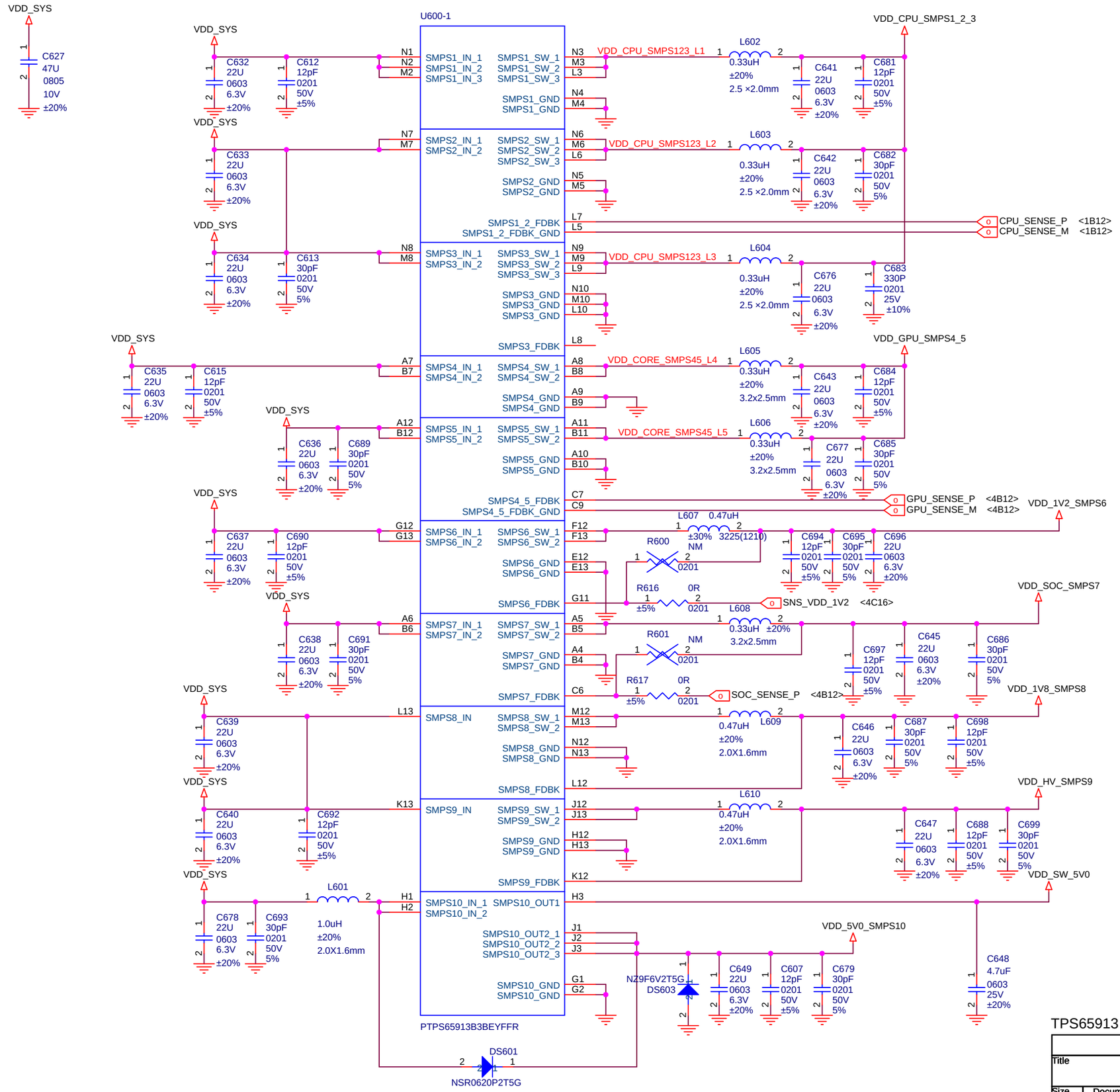

TPS65913 SMPS

Title	MI-THREE
Size A3	Document Number <Doc>
Rev	P2B
Date:	Sheet 9 of 26

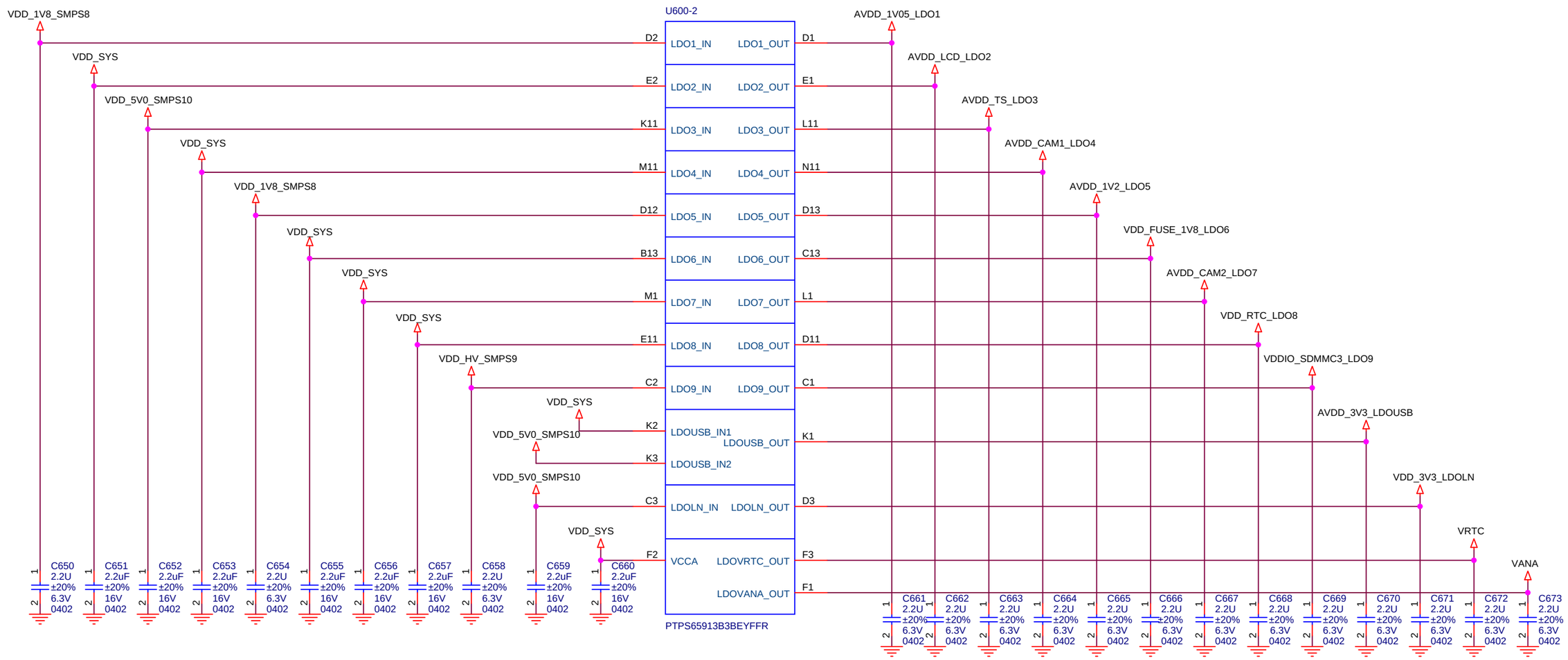

TPS65913 LDO

Title	MI-THREE	
Size A3	Document Number <Doc>	Rev P2B
Date:	Sheet 10 of 26	

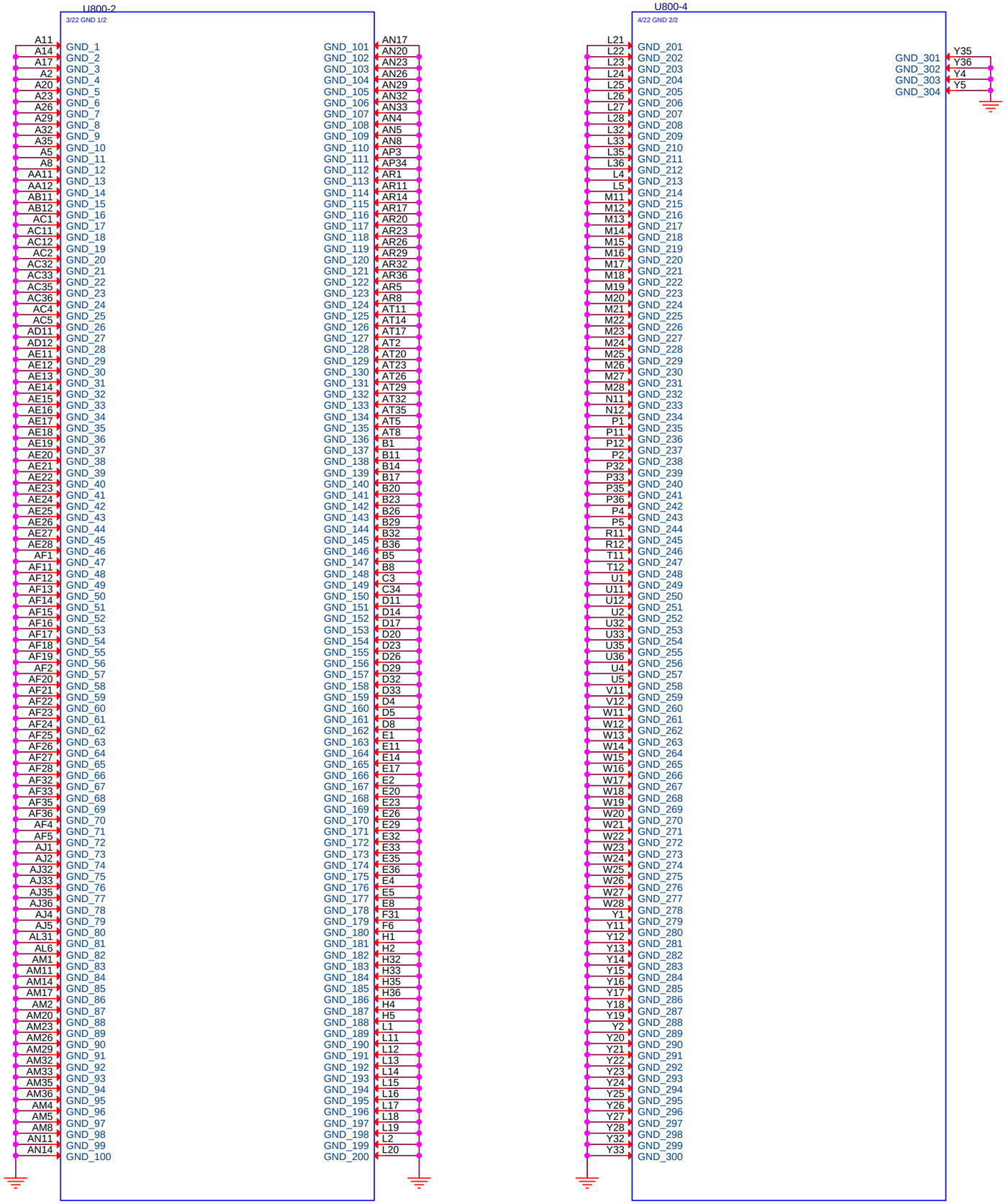

AP40-3 GND

Title	MI-THREE	
Size A3	Document Number <Doc>	Rev P2B
Date:	Sheet 11 of 26	

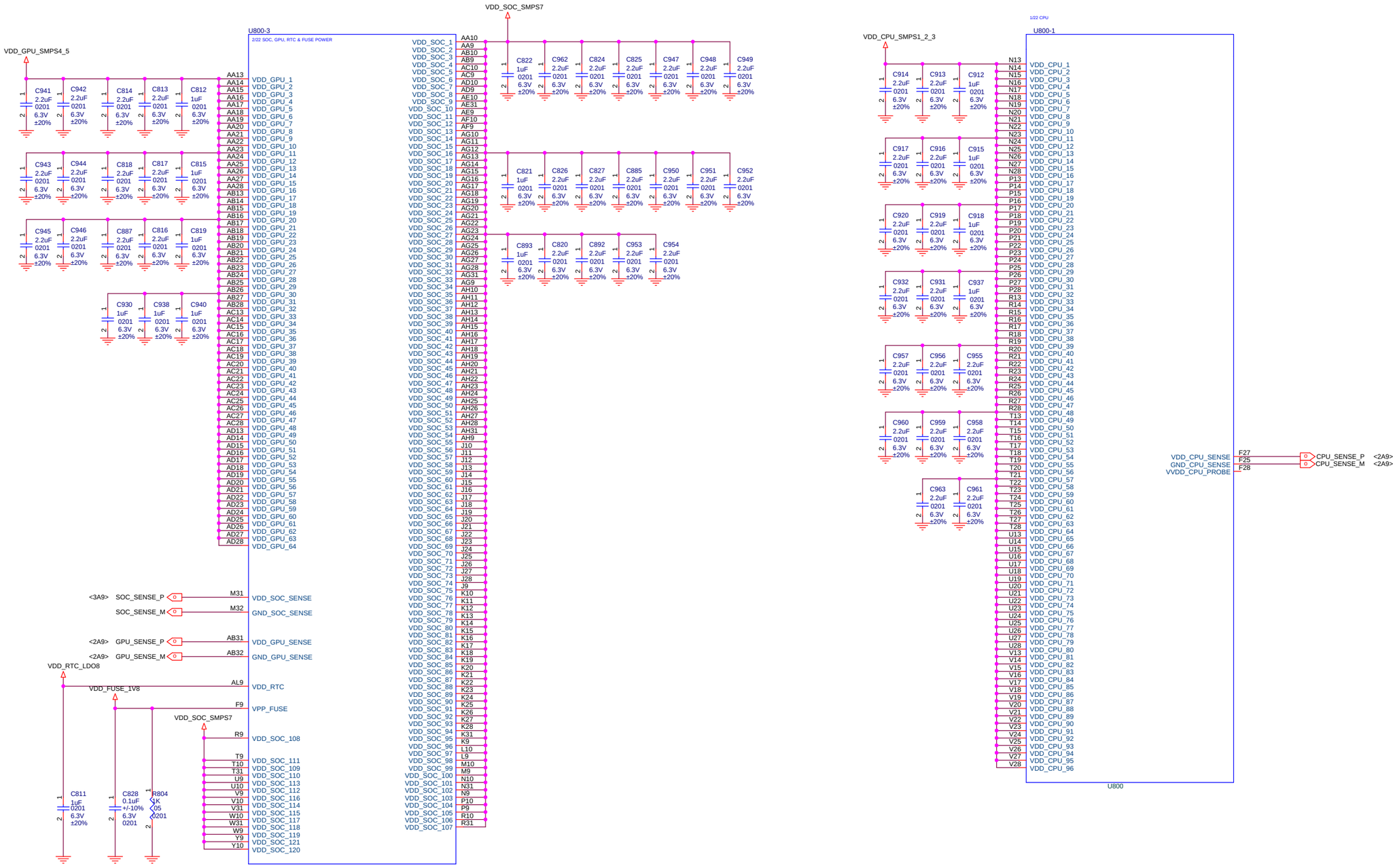

AP40-4 CORE&CPU

Title	MI-THREE	
Size A2	Document Number <Doc>	Rev P2B
Date:	Sheet 12 of 26	

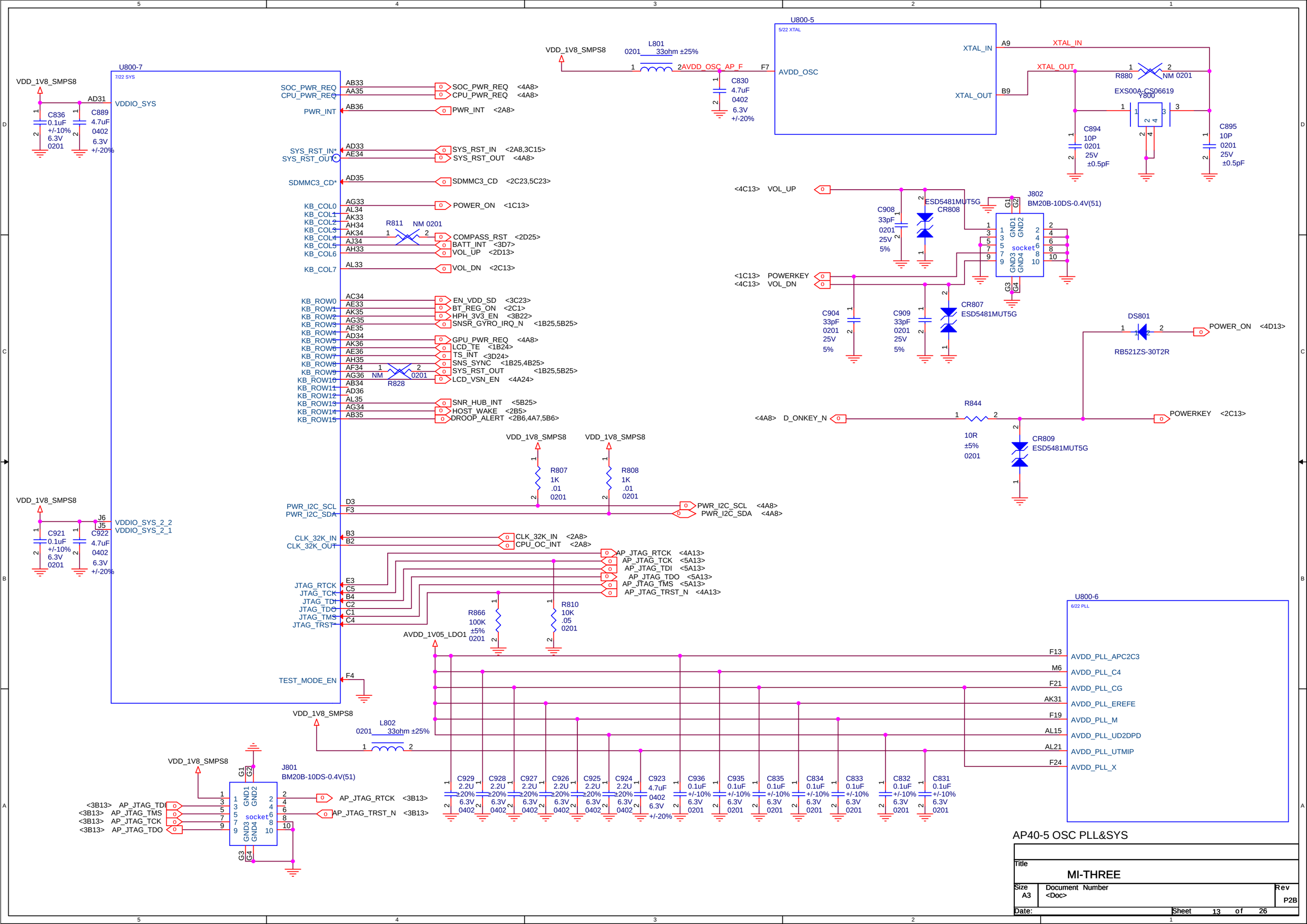

AP40-5 OSC PLL&SYS

Title	MI-THREE	
Size A3	Document Number <Doc>	Rev P2B
Date:	Sheet 13 of 26	

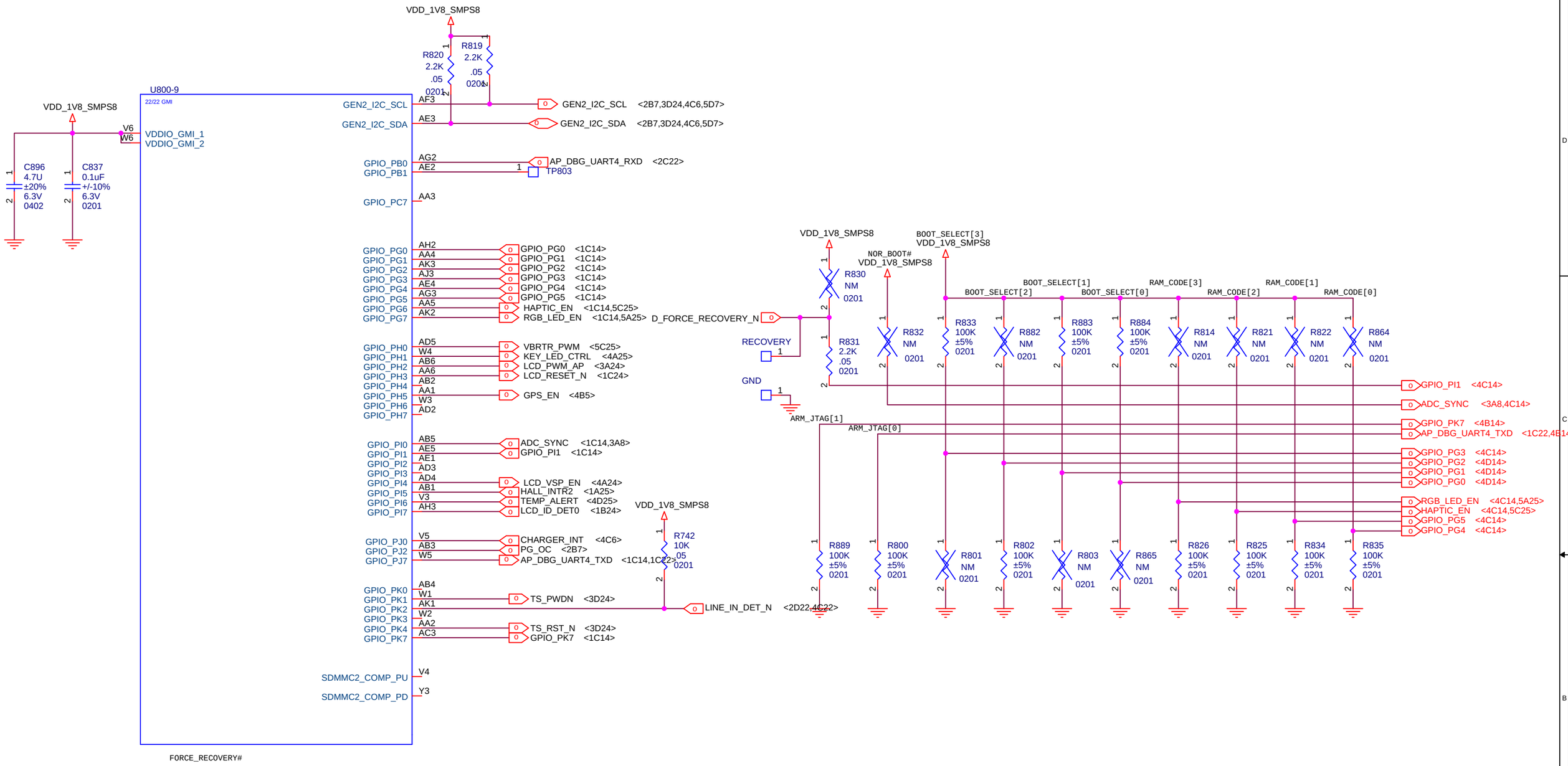

AP40-6 GMI

Title	MI-THREE	
Size A3	Document Number <Doc>	Rev P2B
Date:	Sheet 14 of 26	

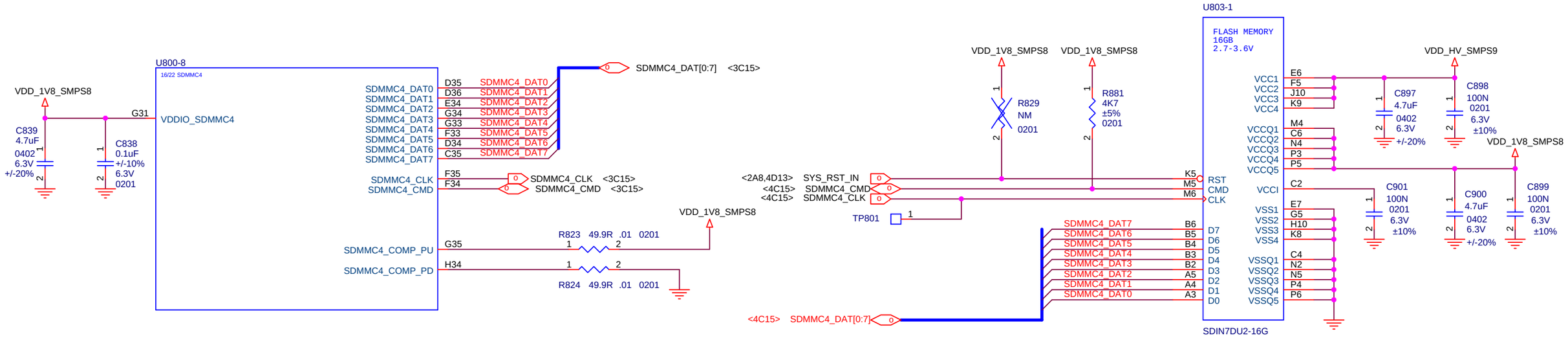

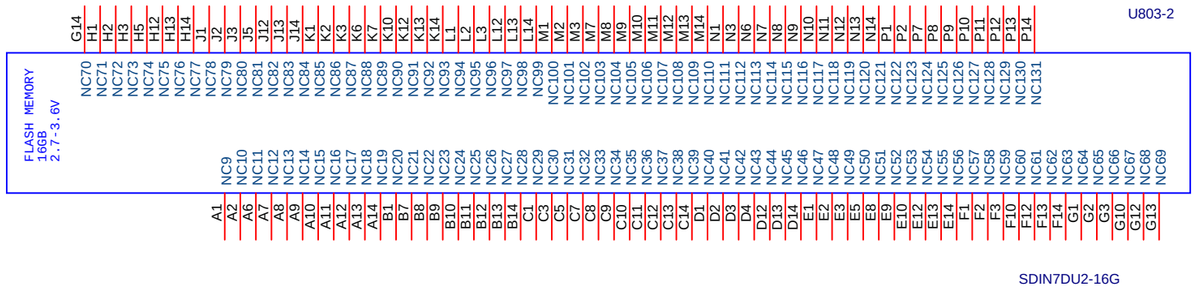

AP40 EMMC

Title	MI-THREE
Size A3	Document Number <Doc>
Rev	P2B
Date:	Sheet 15 of 26

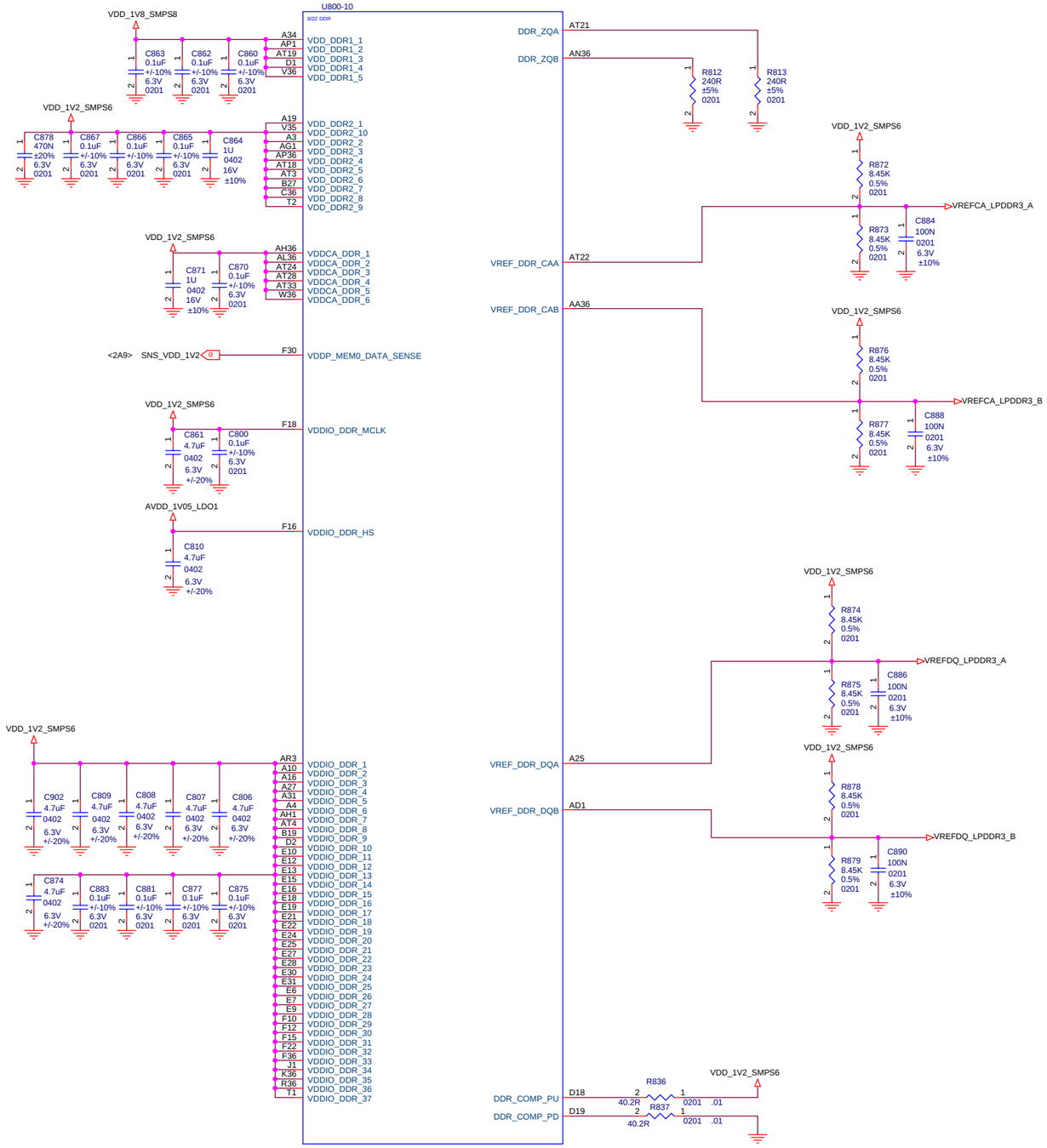

Title	MI-THREE		
Size A2	Document Number <Doc>		Rev P2B
Date:		Sheet 16 of 26	

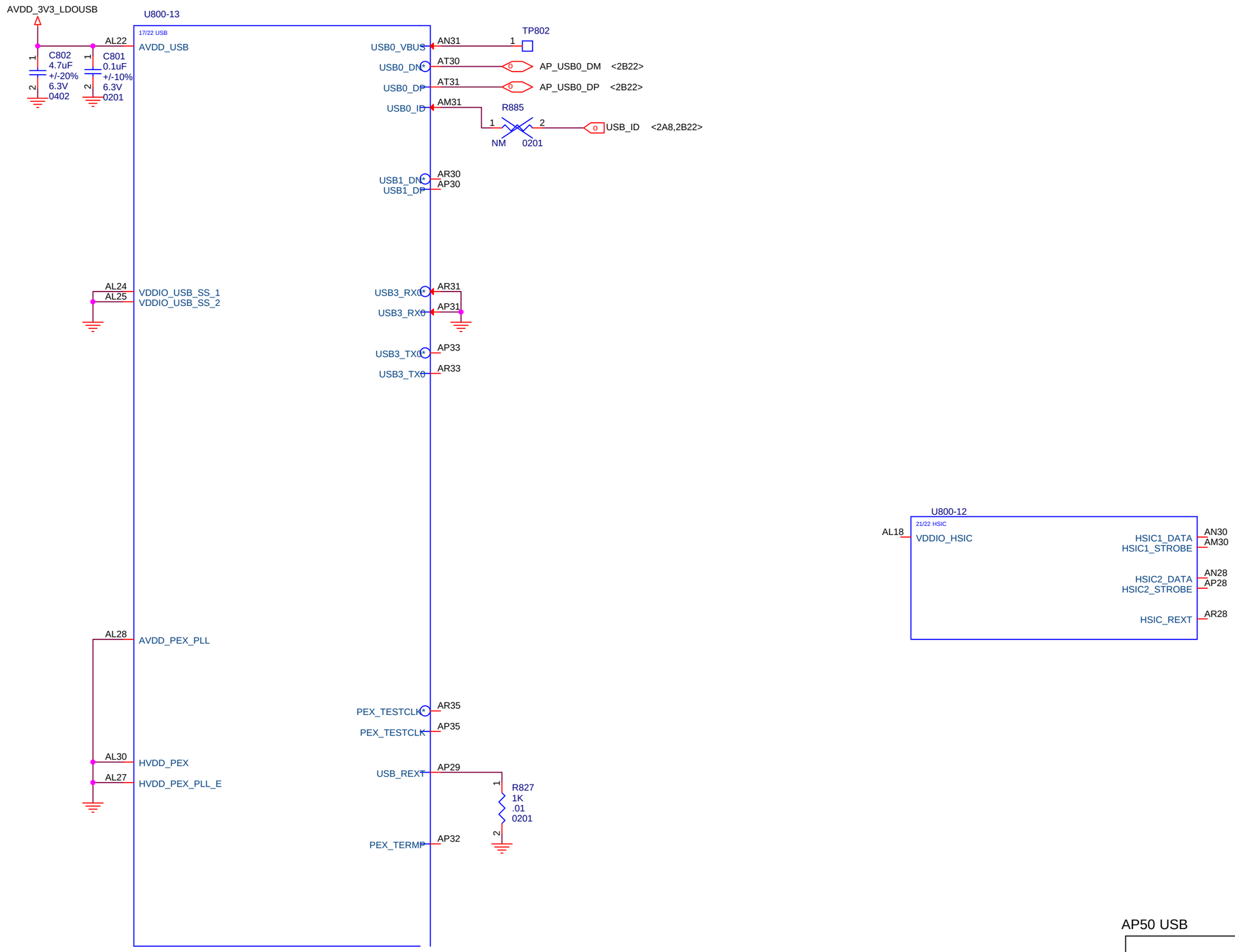

AP50 USB

Title	MI-PAD	
Size A3	Document Number <Doc>	Rev P2B
Date:	Sheet 17 of 26	

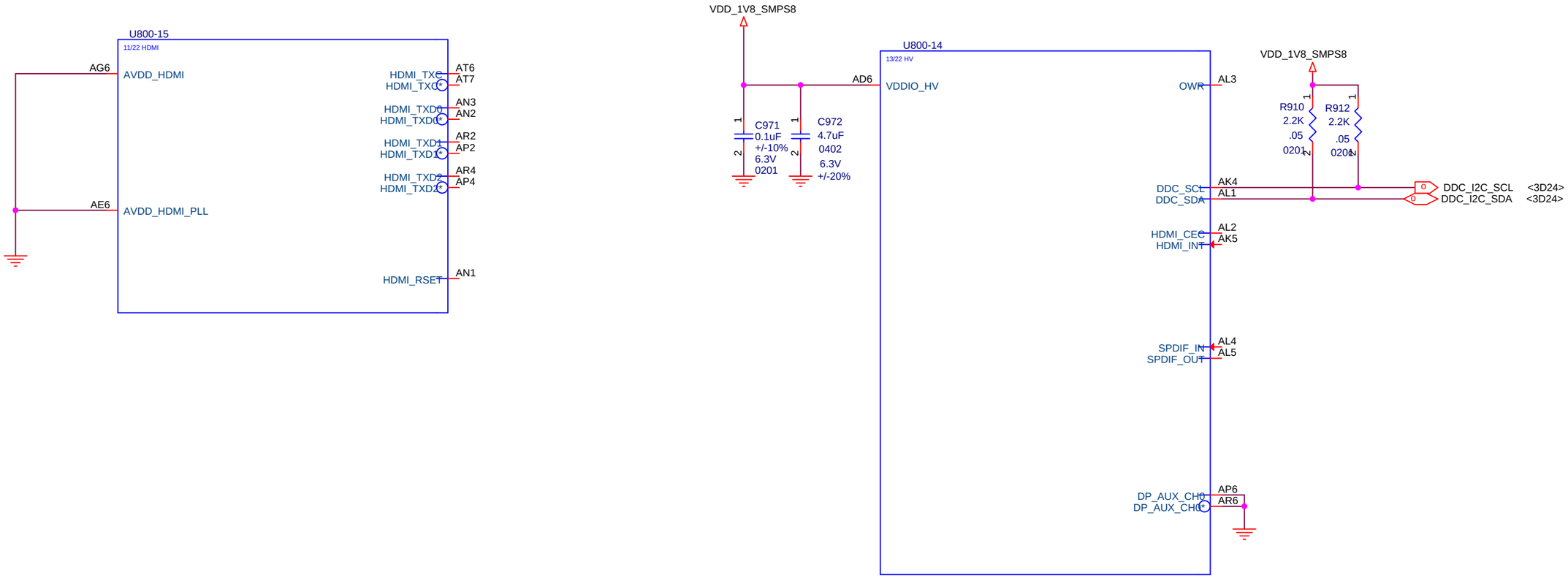

HDMI

Title	MI-THREE	
Size A3	Document Number <Doc>	Rev P2B
Date:	Sheet 18 of 26	

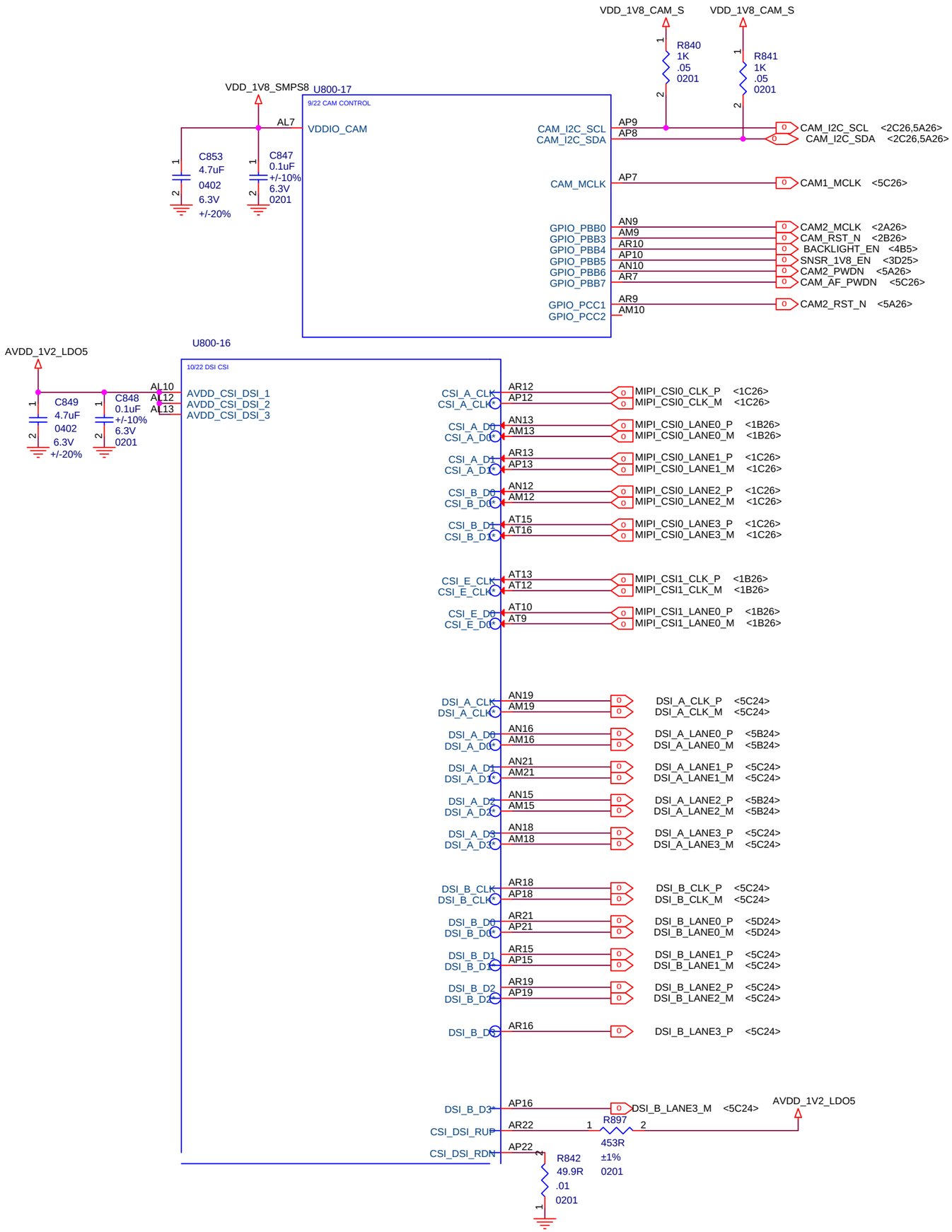

AP40 CAM CSI/DSI

Title	MI-THREE	
Size A3	Document Number <Doc>	Rev P2B
Date:	Sheet 19 of 26	

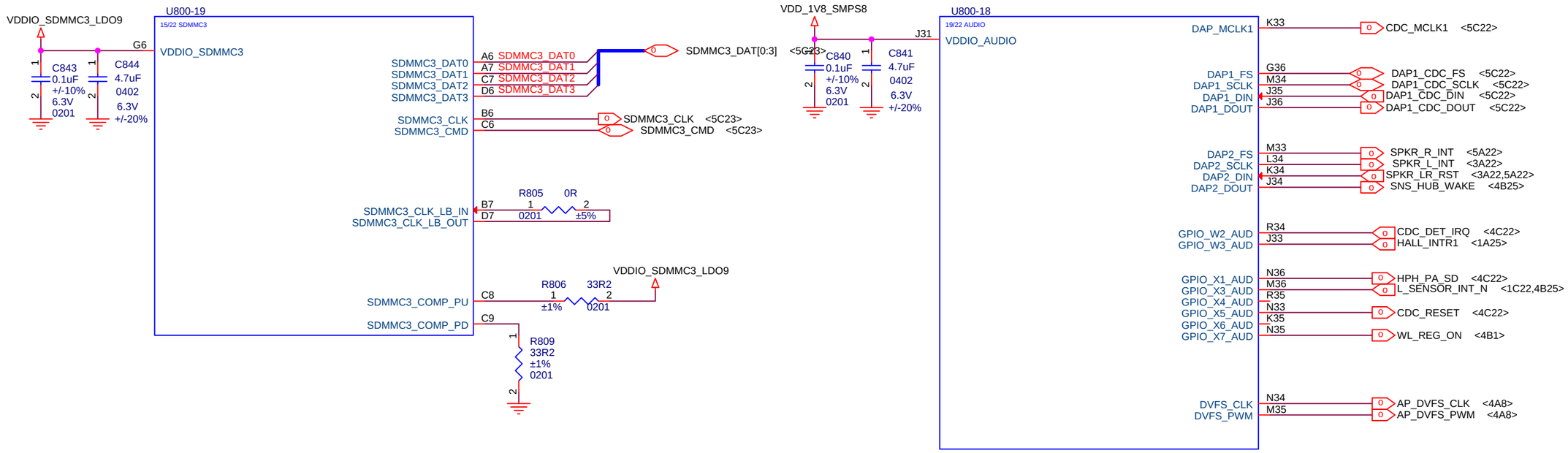

AP40 SD

Title	MI-THREE	
Size A3	Document Number <Doc>	Rev P2B
Date:	Sheet 20 of 26	

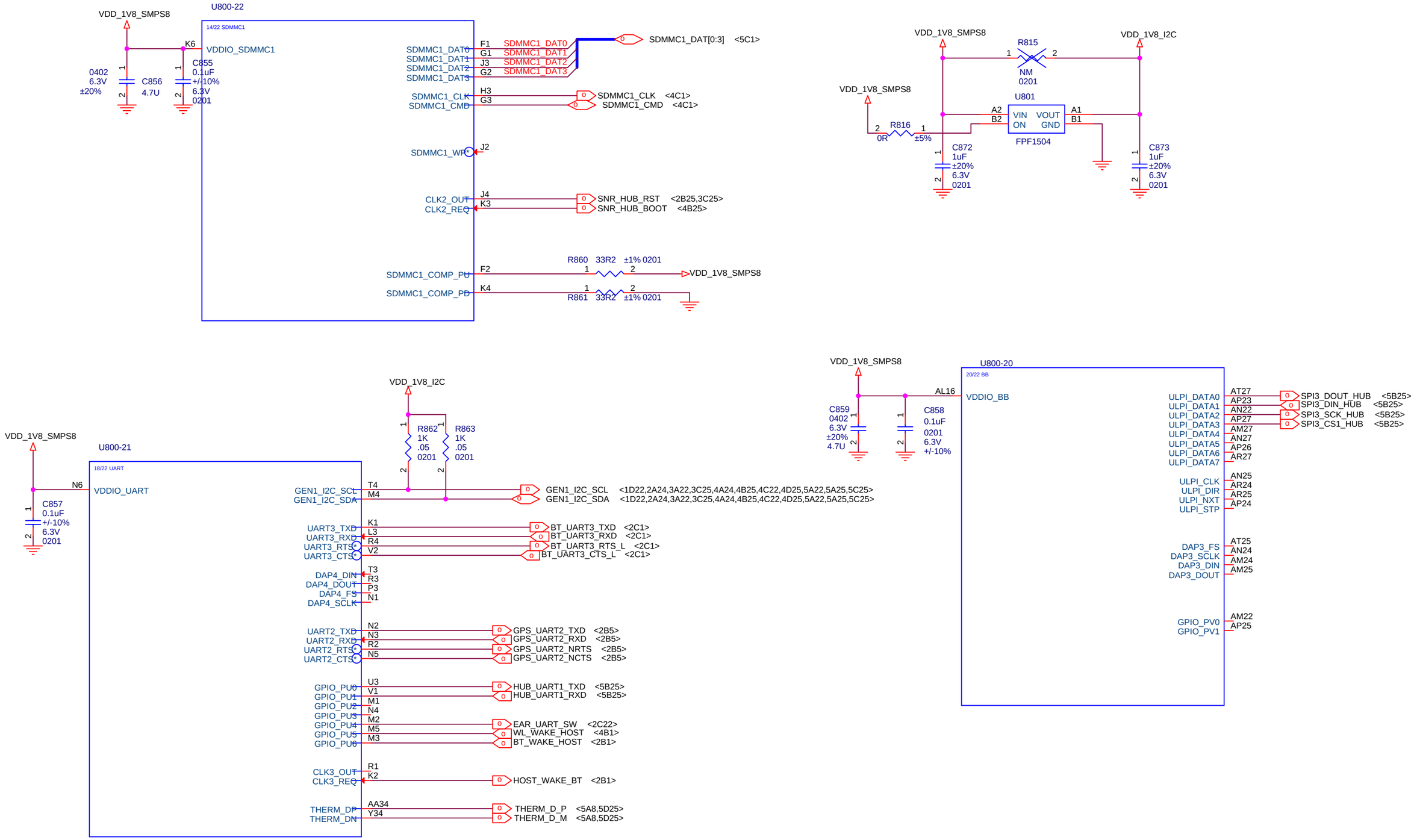

AP40 UARD&BB

Title	MI-THREE	
Size A3	Document Number <Doc>	Rev P2B
Date:	Sheet 21 of 26	

CODEC

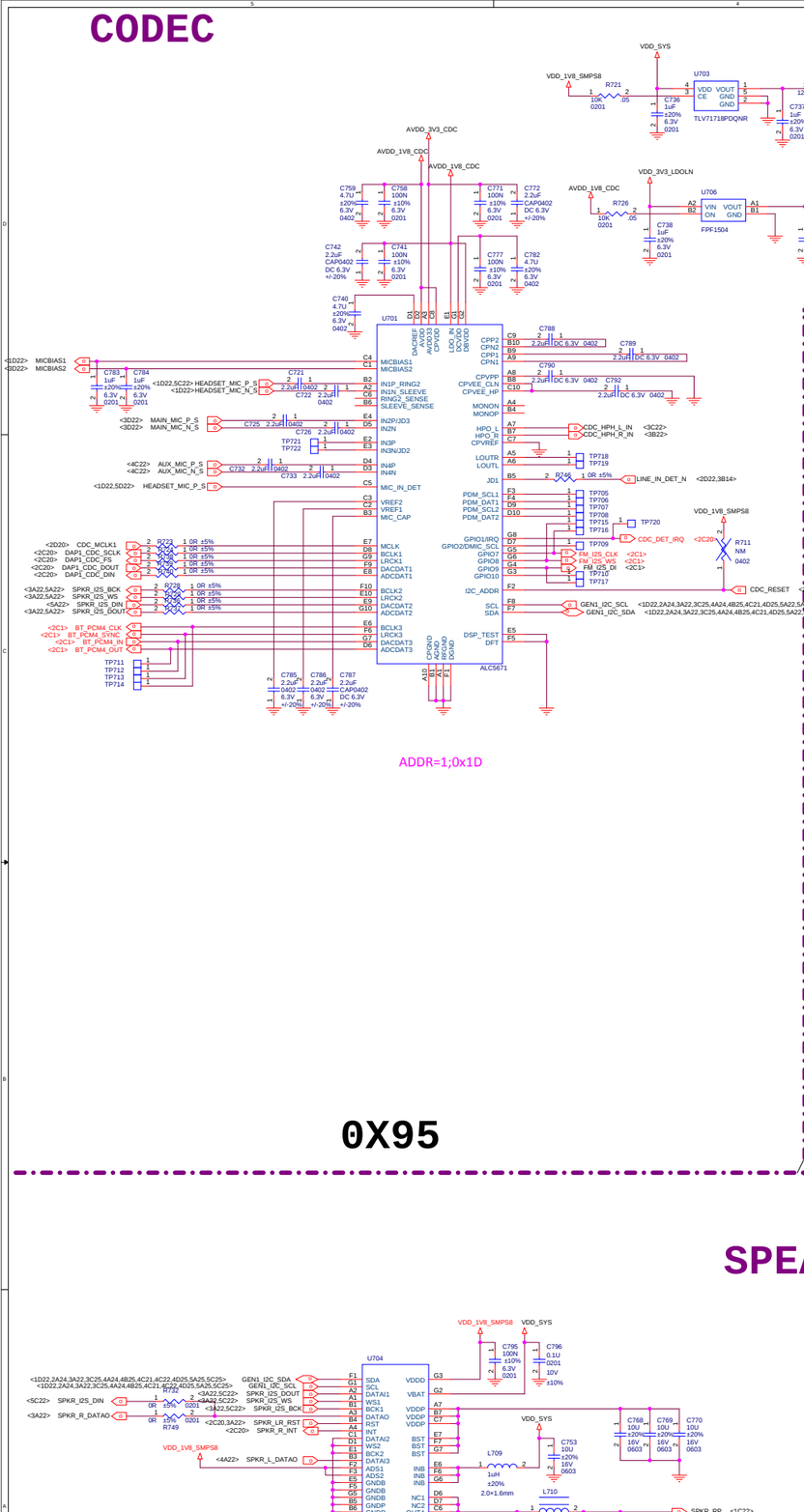

MAIN Mic

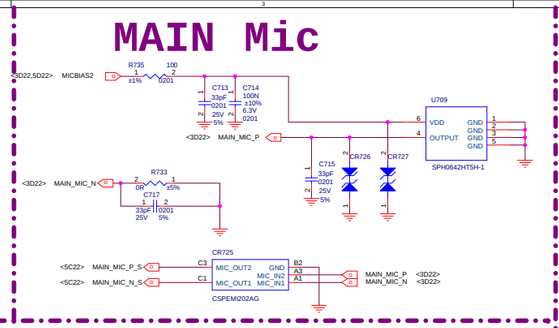

HEADSET

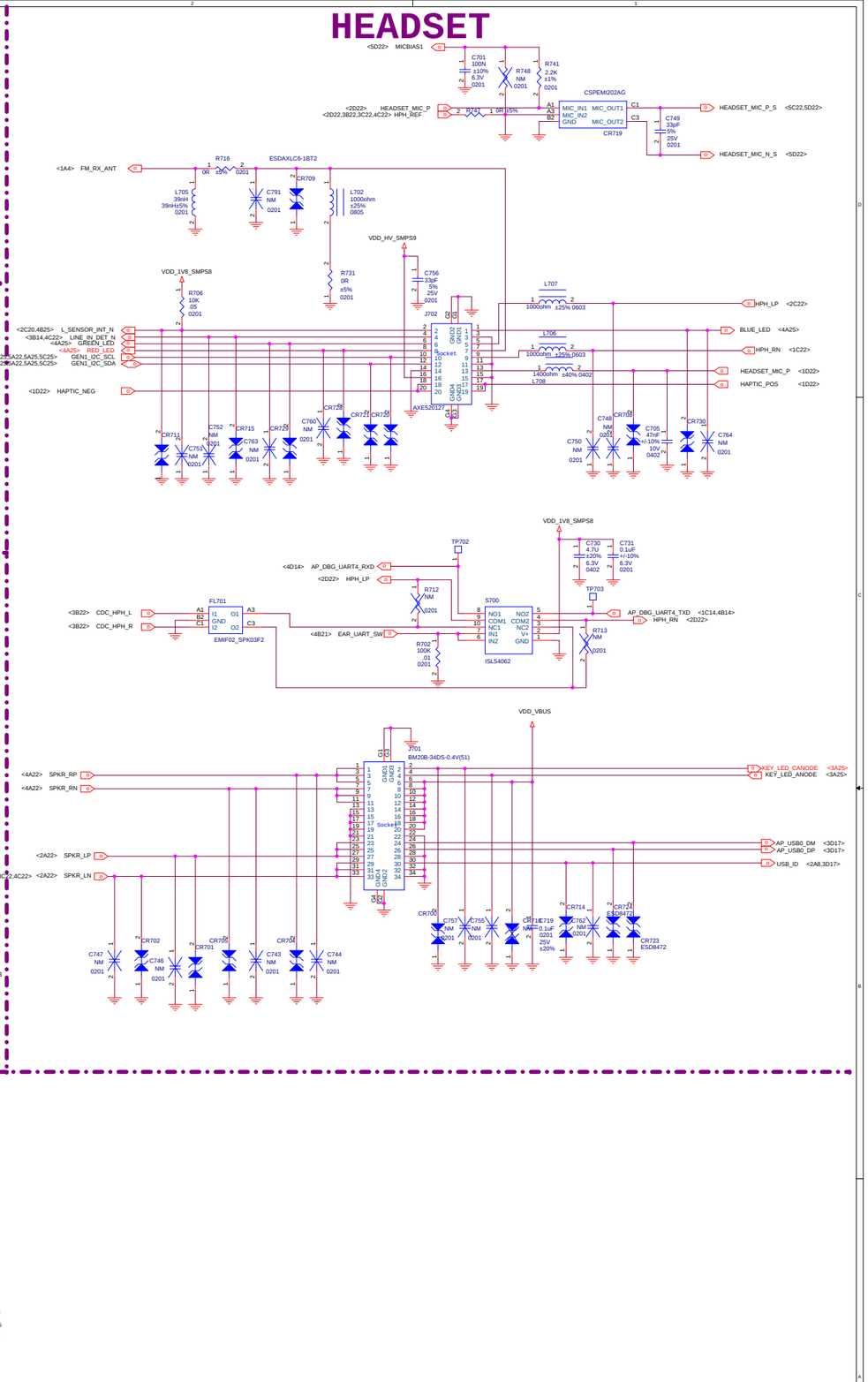

AUX Mic

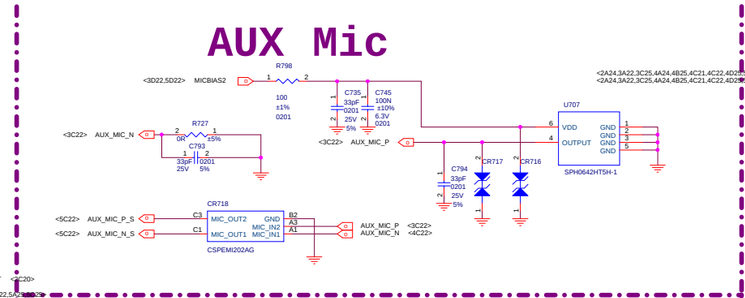

HEADPHONE PA

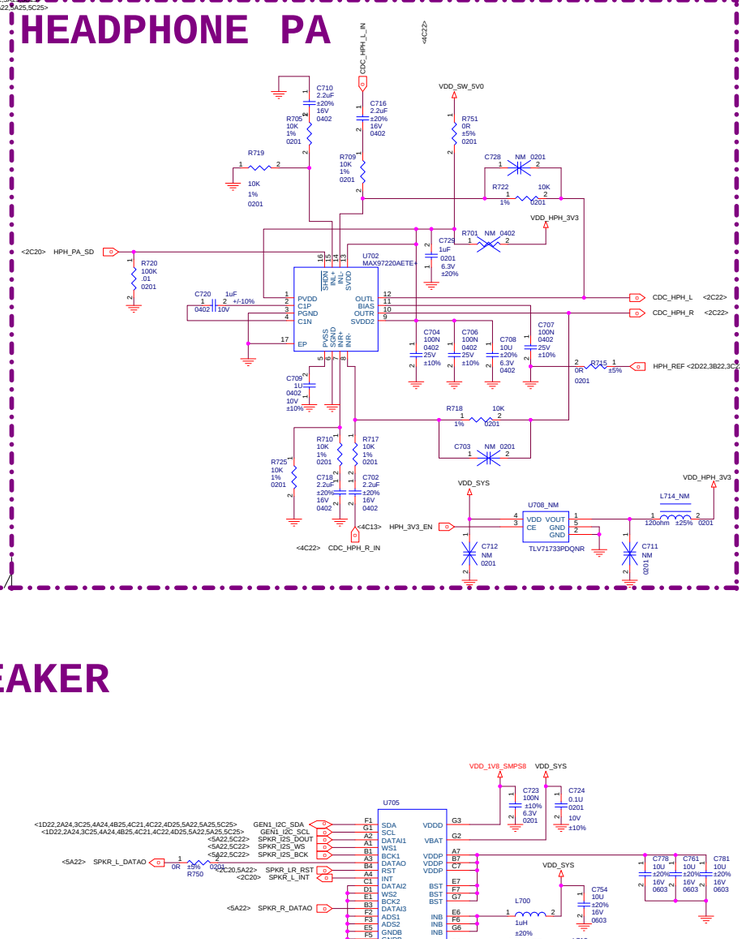

0X95

SPEAKER

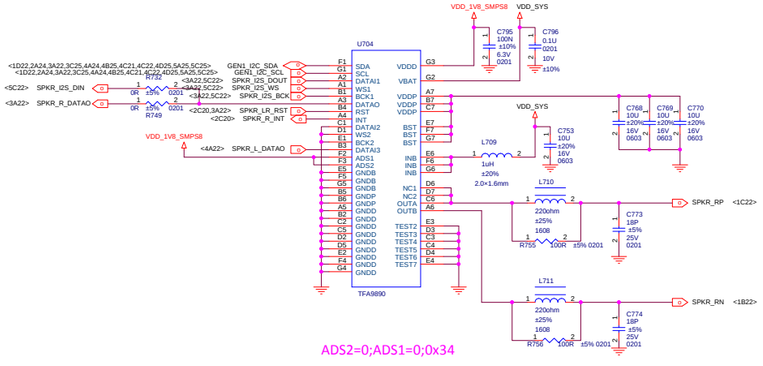

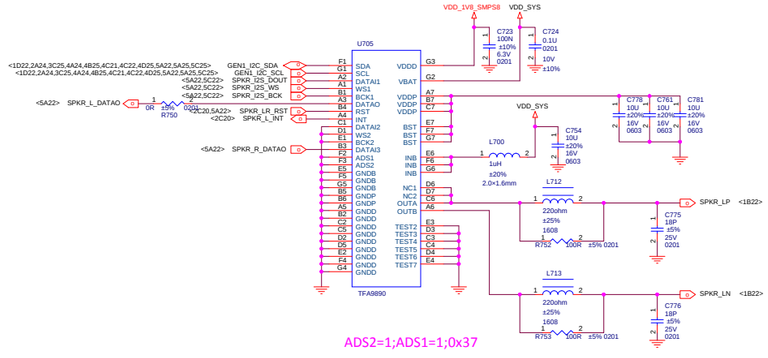

Title	<Title>		
Size A1	Document Number <Doc>		Rev P2B
Date: Wednesday, May 14, 2014	Sheet 22 of 26		

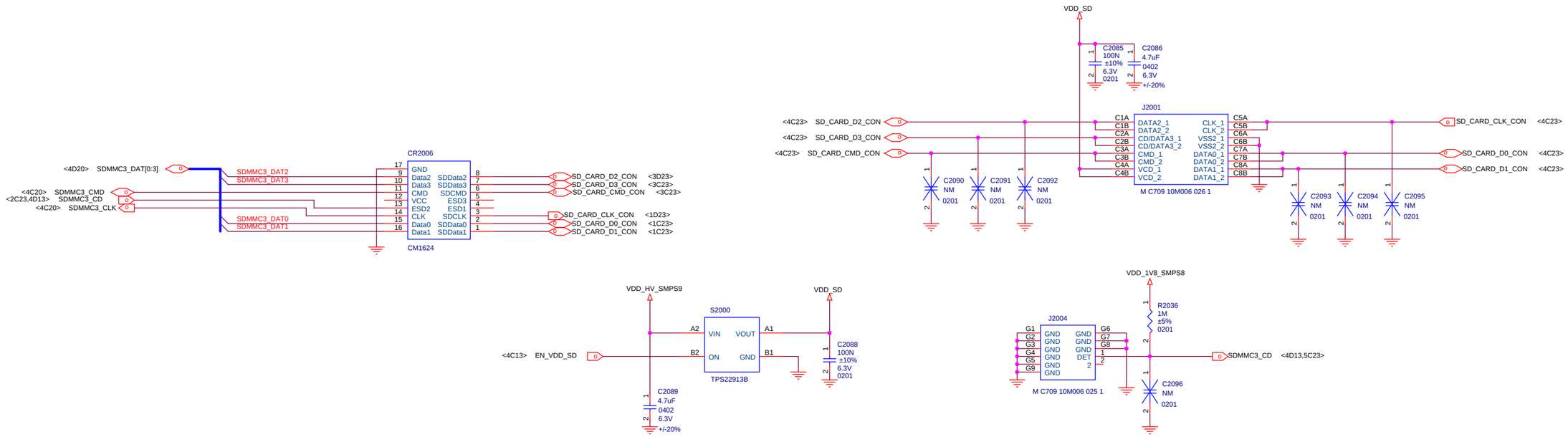

LCD

Title		
MI-THREE		
Size A2	Document Number <Doc>	Rev P2B
Date:	Sheet 23 of 26	

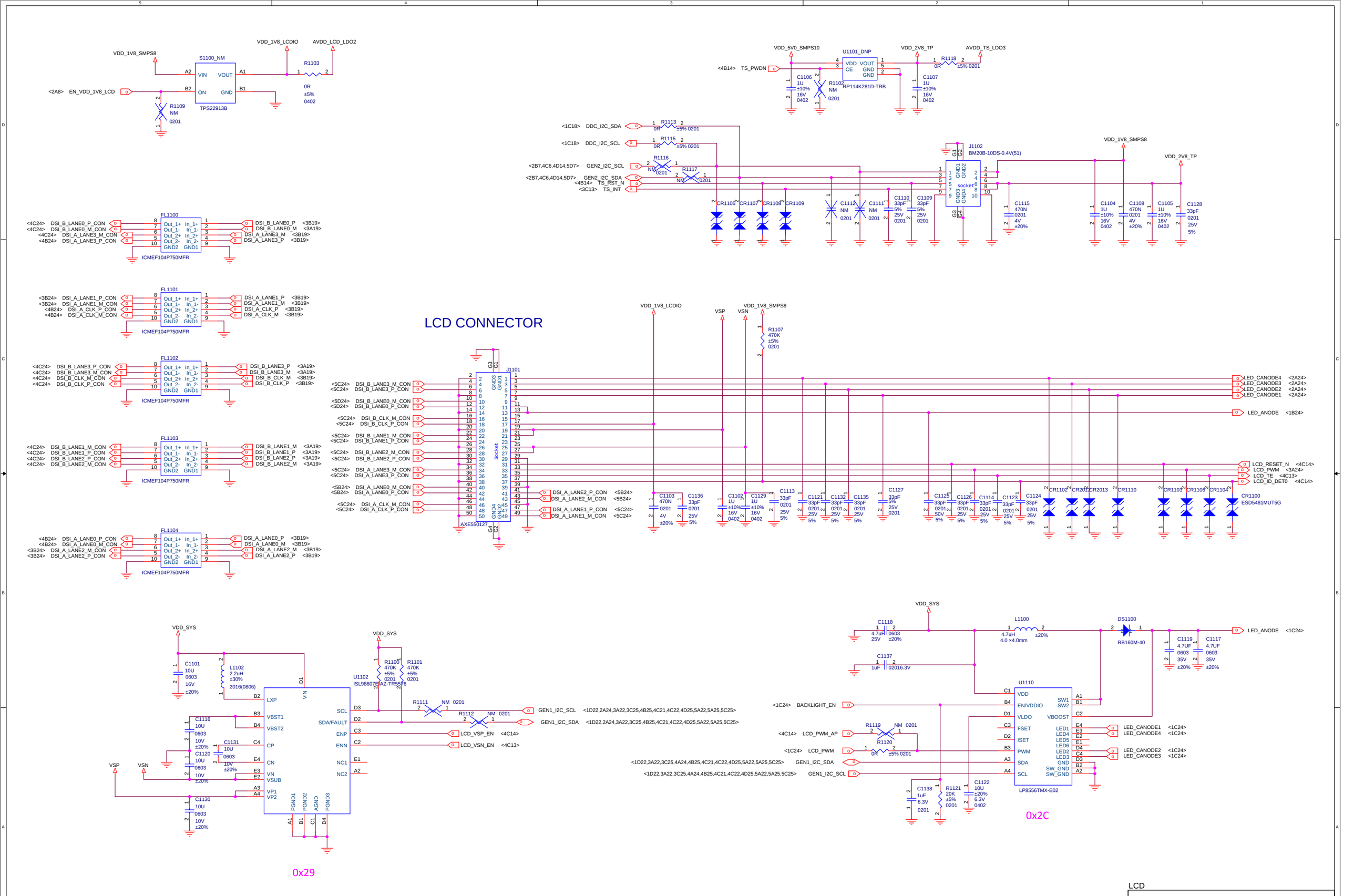

LCD

Title: MI-THREE

Size: A2 | Document Number: <Doc> | Rev: P2B

Date: | Sheet 24 of 26

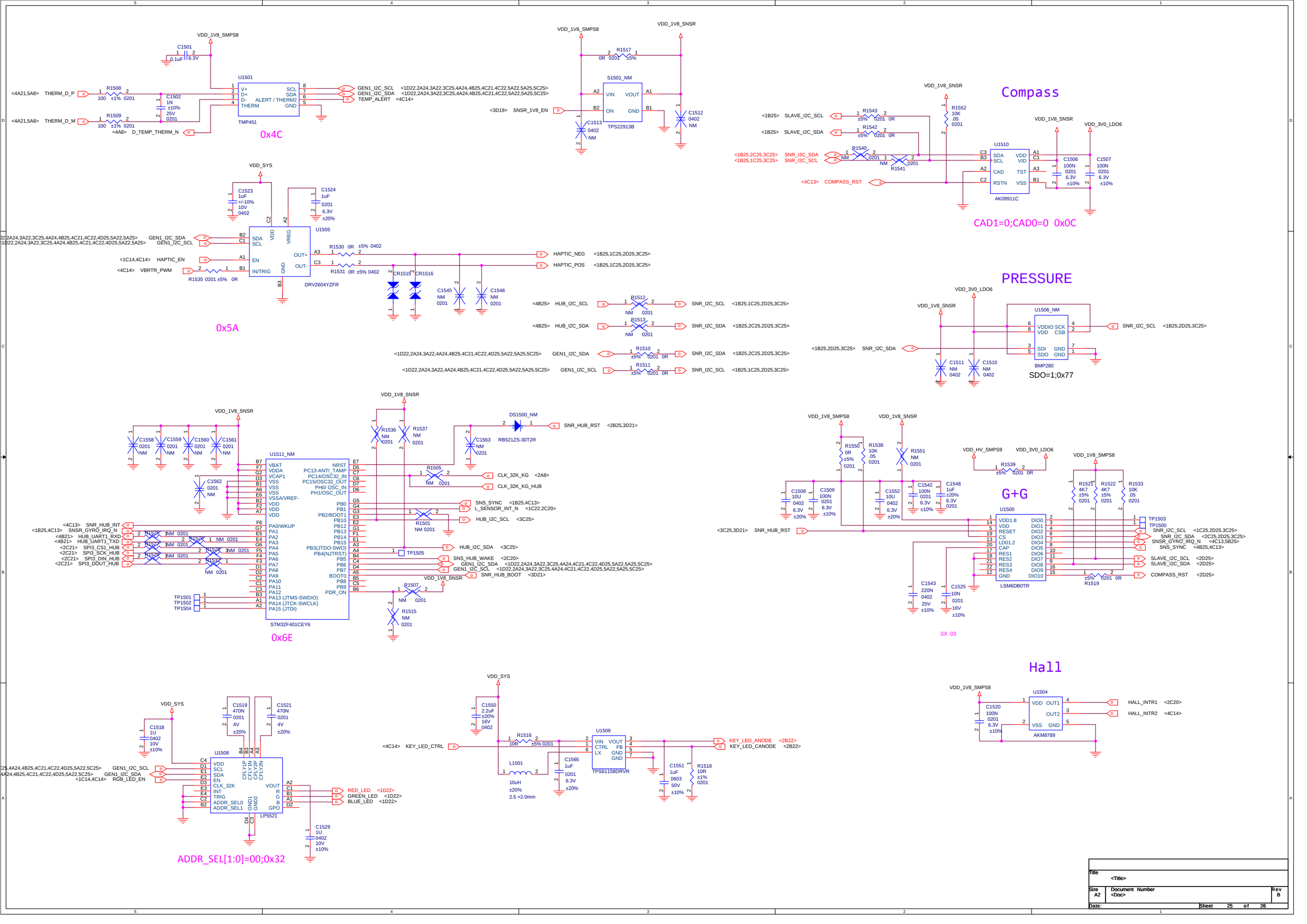

Title	<Title>	
Size A2	Document Number <Doc>	Rev B
Date:	Sheet 25 of 26	

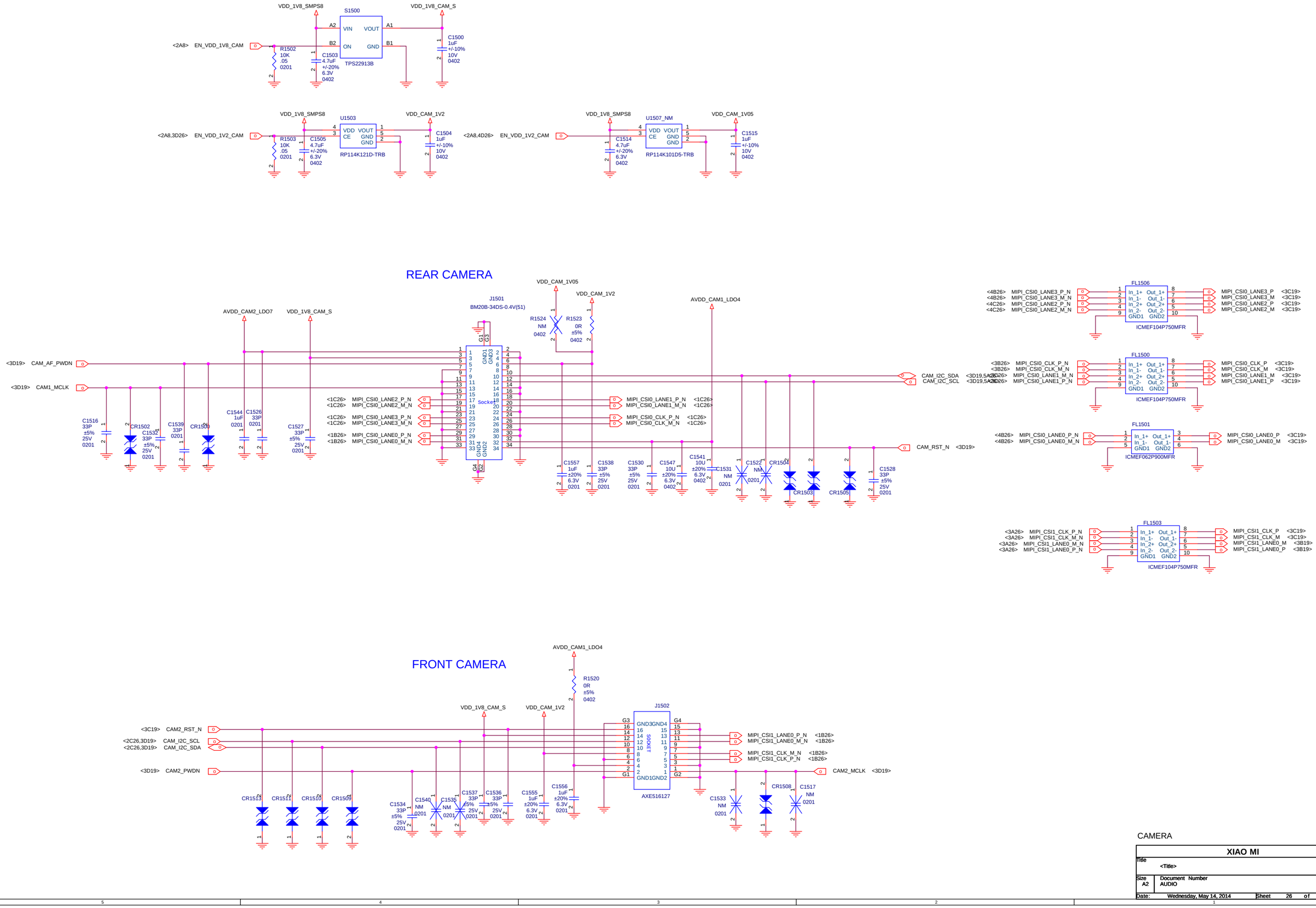

CAMERA

XIAO MI		
Title <Title>		
Size A2	Document Number AUDIO	Rev P2B
Date: Wednesday, May 14, 2014	Sheet 26 of 26	